# EVO/PWM-Protocol

## Standard For Electrically Isolated Control Of Motors, Drives, Heaters

## & Other High Voltage Equipment

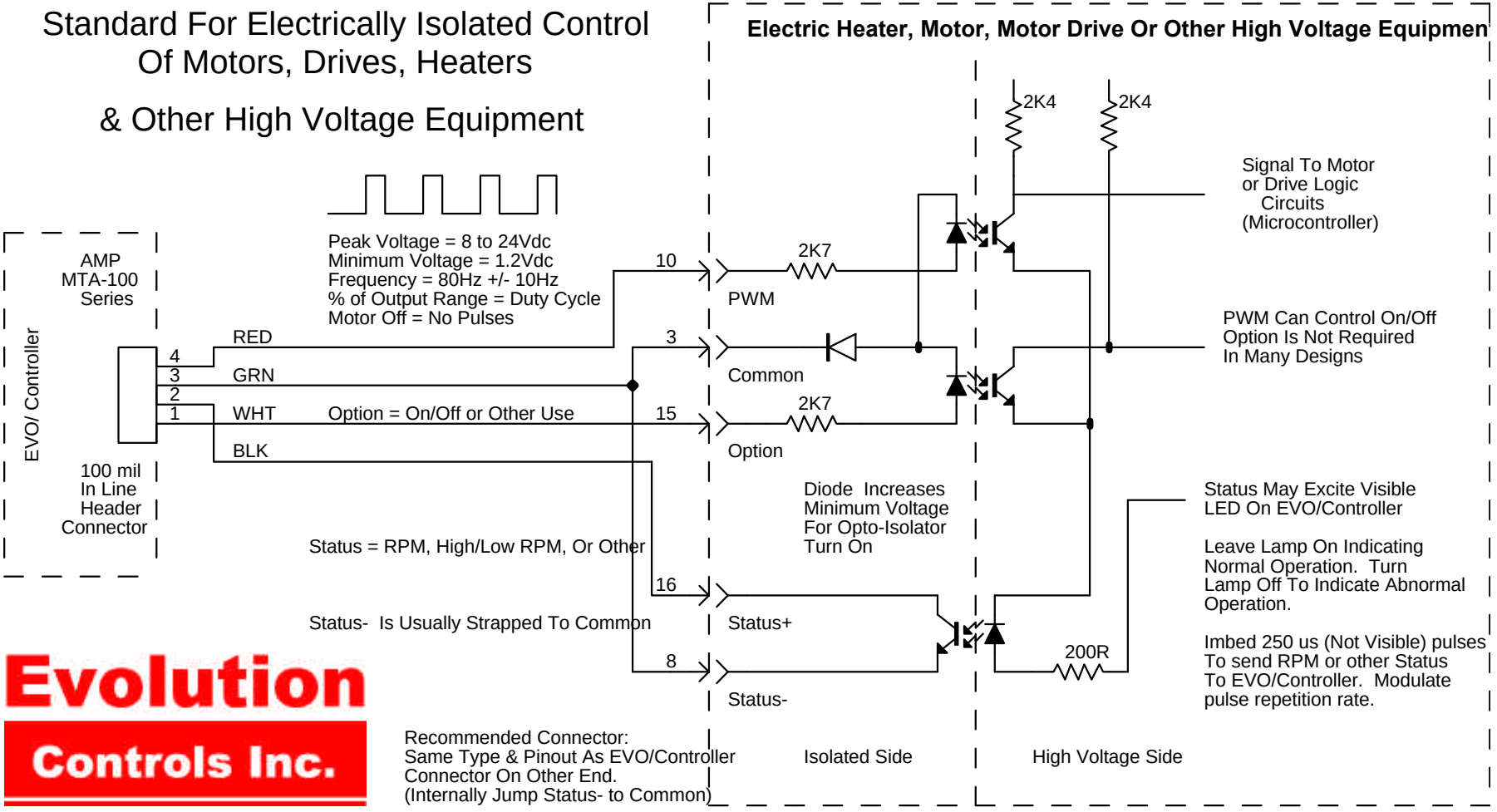


Evolution Controls Inc.